BAGGER SPECIFICATIONS	
WEIGHT	350 LBS (158.6 KG)
ELECTRICAL	UNIVERSAL INPUT, 100V TO 240V VAC, 50/60 Hz POWER CONSUMPTION: 500W (VA) MAX
AIR FEED	5 CFM/80 PSI OF CLEAN, DRY AIR
PASS-THROUGH	UP TO 5 INCHES (127 MM)
BAG THICKNESS	1.09 - 4.0 MIL
BAG SIZES	WIDTH: 2 to 12 INCHES (51 TO 305 MM) / LENGTH: 3 to 20 INCHES (76 TO 508 MM)
WEIGHT CAPACITY	UP TO 5 LBS (WITH LOAD SHELF)

PRINTER SPECIFICATIONS	
WEIGHT	66 LBS (30 KG)
ELECTRICAL	100-240V VAC, 50/60 Hz, 300W
AIR FEED	SUPPLIED FROM BAGGER
LABEL SIZE	UP TO 4 INCHES (102 MM) WIDE, 20 INCHES (508 MM) LONG

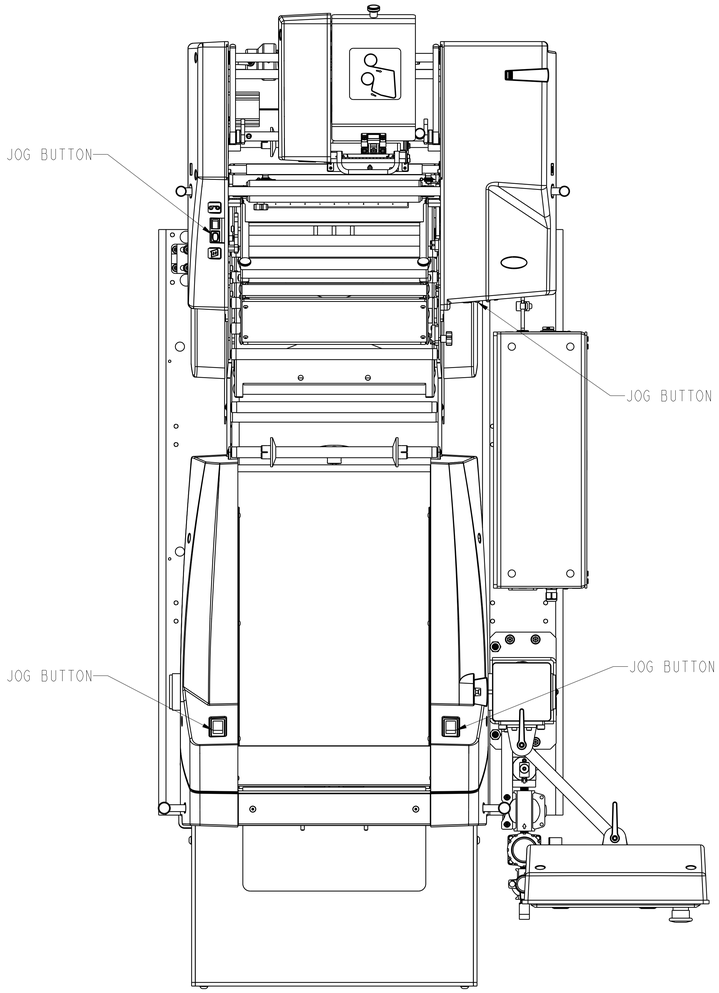

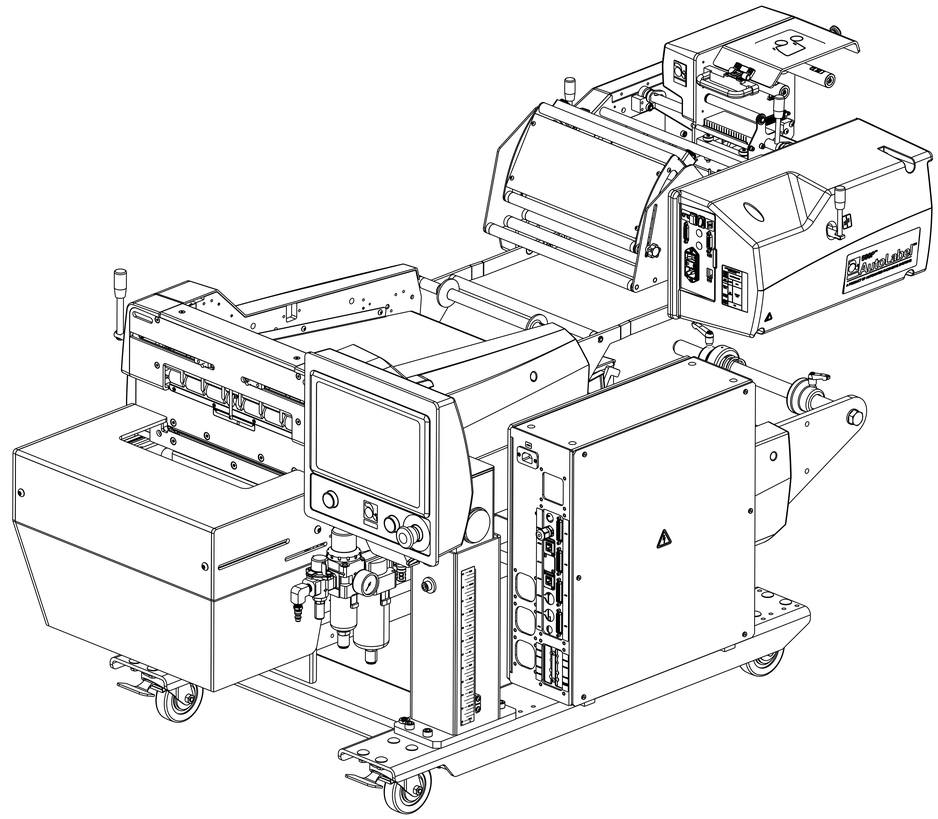

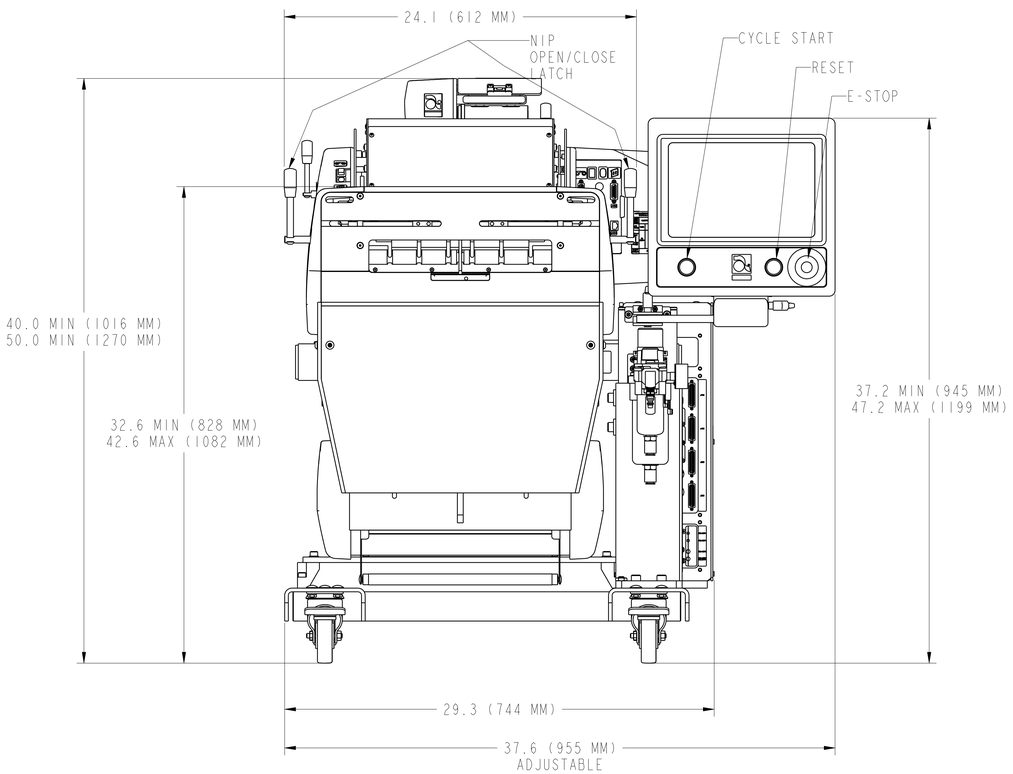

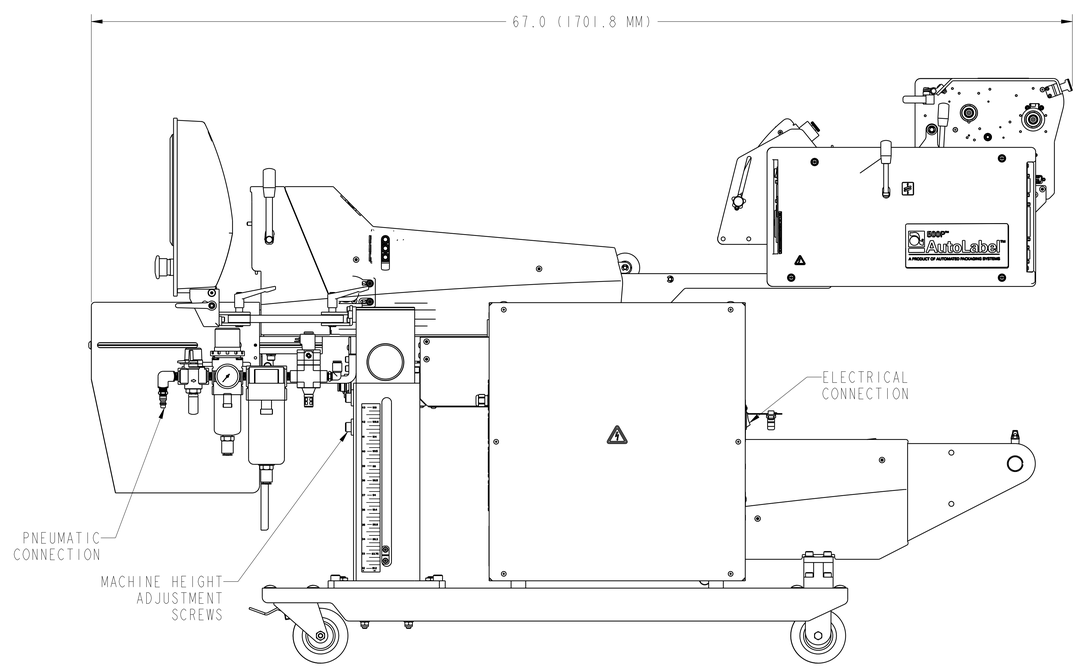

REV	BY	DATE	ECN	DESCRIPTION
B	DMF	7-1-21	3265	UPDATED POWER CONSUMPTION: 500W WAS 1500W, 300W WAS 2.4kW
A	DMF	11-15-20	2895	RELEASED

FINISH: NONE

MATERIAL: NONE

MACHINE SURFACES TO BE NO GREATER THAN 125 (3.2) ✓ UNLESS OTHERWISE NOTED.
PART MUST BE FREE OF BURRS AND SHARP EDGES

TOLERANCE	INCHES	mm
1 PLACE DIMS	± .1	±2.5
2 PLACE DIMS	± .02	±0.51
3 PLACE DIMS	± .005	±0.13
ANGULAR	± 1/2°	

NOTICE: THIS DOCUMENT CONTAINS PROPRIETARY INFORMATION AND SHALL NOT BE USED OR REPRODUCED OR ITS CONTENTS DISCLOSED TO ANY THIRD PARTY WITHOUT THE WRITTEN CONSENT OF AUTOMATED PACKAGING SYSTEMS, INC.

INCH [MM] THIRD ANGLE PROJECTION

Voulted

Automated PACKAGING SYSTEMS
10175 PHILIPP PARKWAY - STREETSBORO, OH 44241

DRAWING SIZE	SCALE	DRAWN BY	BOM REFERENCE NUMBER
E	1/4	NAME: DMF DATE: 11-12-20	

TITLE: FOOTPRINT, AB500 & AL500P W/UNWIND

DRAWING NO. FP273 — SHEET 1 OF 1 — REV B

Fabricated & Documented to be RoHS Compliant