SPECIFICATIONS	
WEIGHT	570 LBS (259 KG)
ELECTRICAL	UNIVERSAL INPUT, 100V TO 240V VAC, 50/60 Hz POWER CONSUMPTION: 650W (VA) MAX
AIR FEED	5 CFM/80 PSI OF CLEAN, DRY AIR
PASS-THROUGH	UP TO 6 INCHES (152 MM)
BAG THICKNESS	1.09 - 4.0 MIL
BAG SIZES	WIDTH: 4 to 16 INCHES (102 TO 406 MM)/ LENGTH: 5.5 to 27 INCHES (140 TO 686 MM)

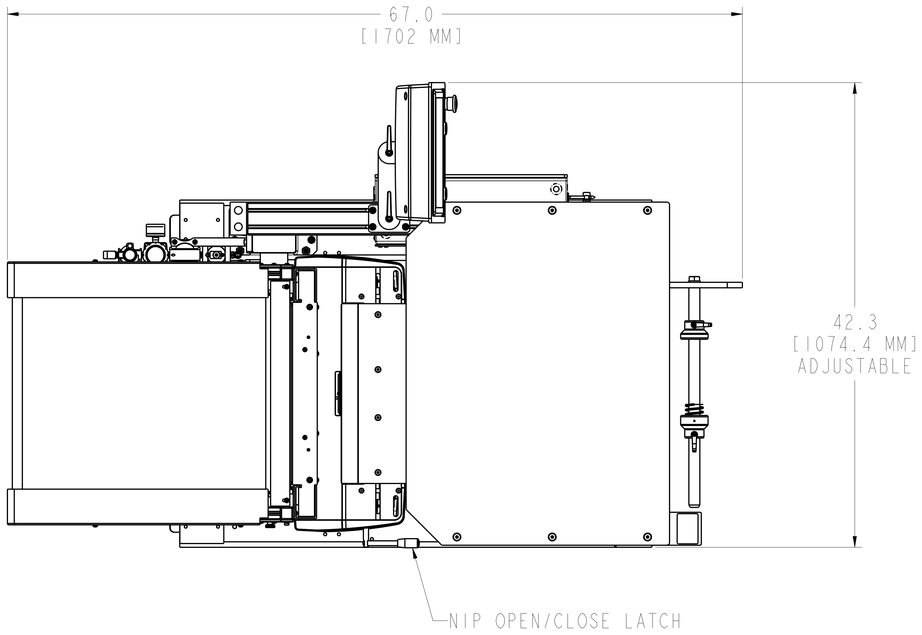

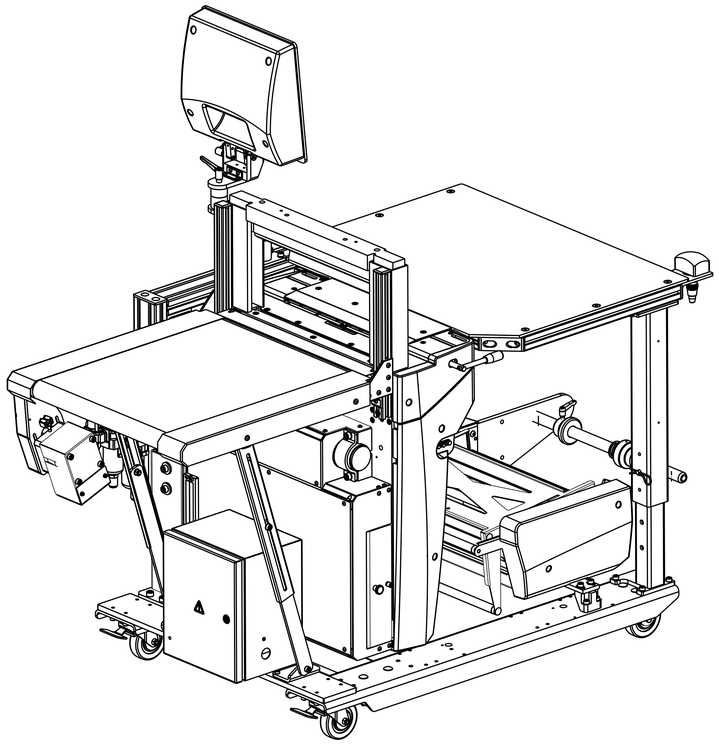

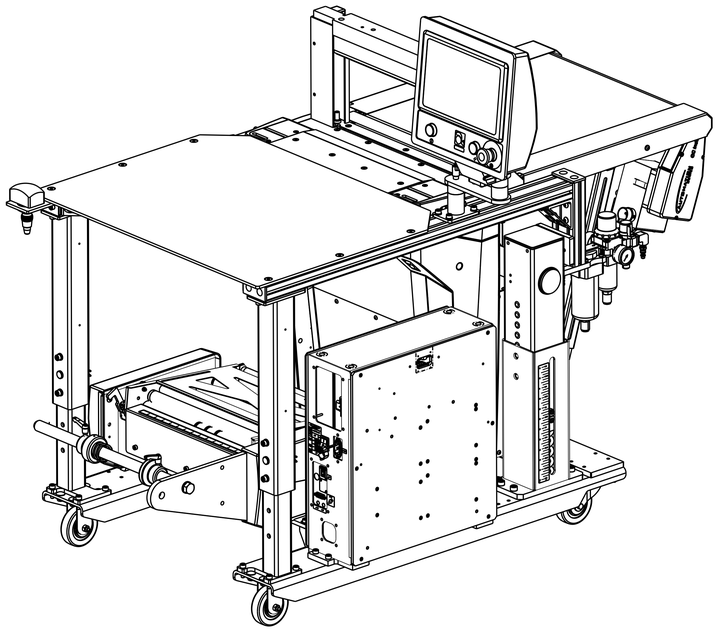

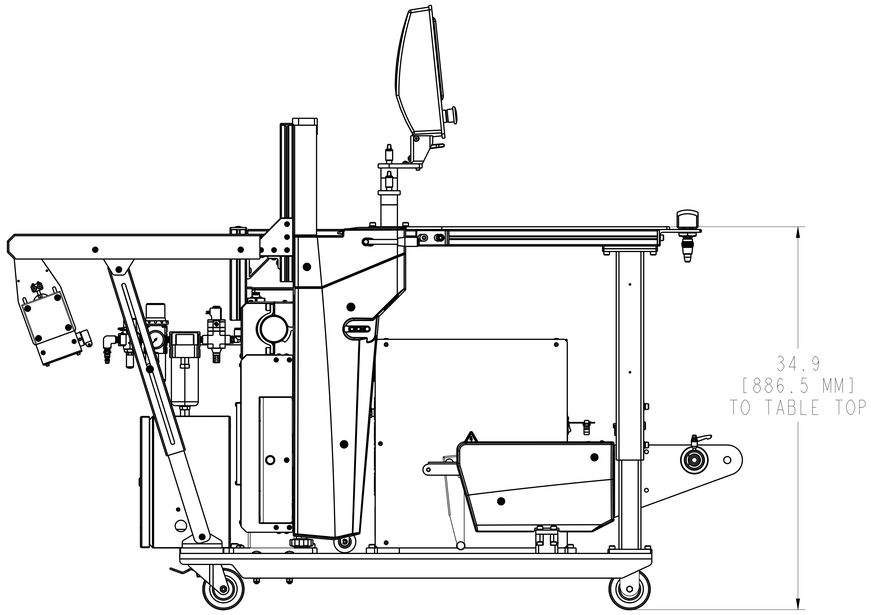

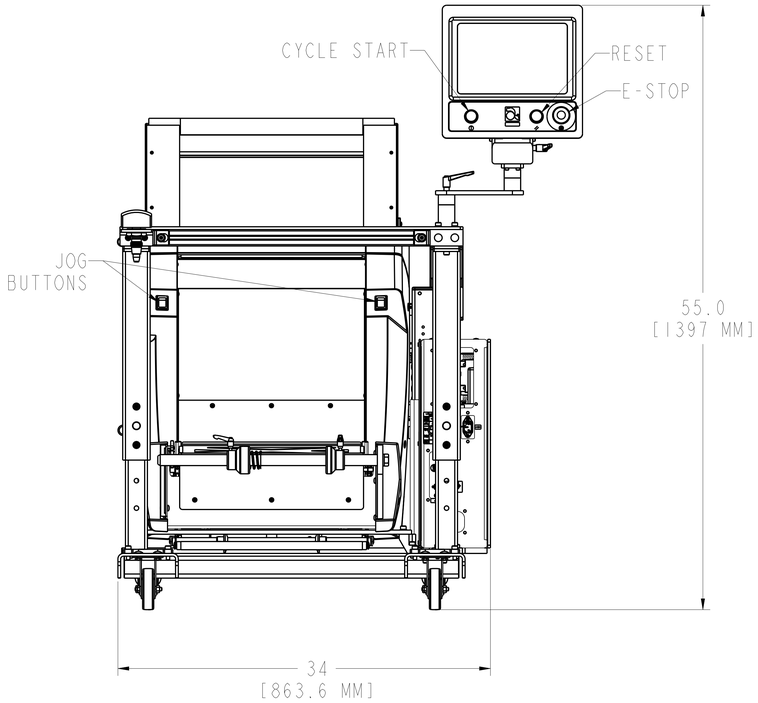

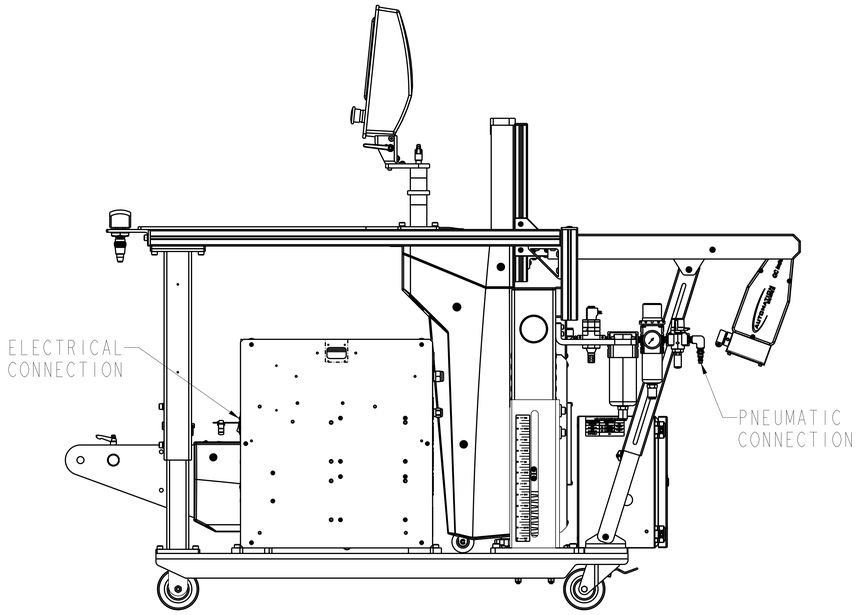

REV	BY	DATE	ECN	DESCRIPTION
A	DMF	7-15-20		RELEASED

FINISH N/A

MATERIAL N/A

MACHINE SURFACES TO BE NO GREATER THAN 125 (3.2) ✓
UNLESS OTHERWISE NOTED.
PART MUST BE FREE OF BURRS AND SHARP EDGES

TOLERANCE	INCHES	MM
1 PLACE DIMS	± .1	±2.5
2 PLACE DIMS	± .01	±0.25
3 PLACE DIMS	± .005	±0.10
ANGULAR	± 1/2°	

NOTICE: THIS DOCUMENT CONTAINS PROPRIETARY INFORMATION AND IT SHALL NOT BE USED OR REPRODUCED OR ITS CONTENT DISCLOSED, IN WHOLE OR PART, WITHOUT THE PRIOR WRITTEN CONSENT OF AUTOMATED PACKAGING SYSTEMS INC.

VAULTED

INCH [MM] THIRD ANGLE PROJECTION

Automated PACKAGING SYSTEMS
10175 PHILIPP PARKWAY - STREETSBORO, OH 44241

DRAWING SIZE	SCALE	DRAWN BY	BOM REFERENCE NUMBER
E	0.188	NAME: DMF DATE: 07-15-20	

TITLE AB600H FOOTPRINT DRAWING

DRAWING NO. FP277 SHEET 1 OF 1 REV A

Fabricated & Documented to be RoHS Compliant